REVISIONS		
NO.	BY	DESCRIPTION
△		
△		

기본사양		
1	MODEL	ZB25-300L-1-U1
2	재질	알류미늄 60계열
3	후처리	아노다이징
4	배관형식	25A HOSE or STEEL PIPING
5	INLET PORT	25A UPPER 1PORT
6	슬릿 간격	1mm
7	풍속편차	±3% 이내
8	유효길이	300mm
9	취부형식	BRACKET 제공(각도 조절 TYPE)

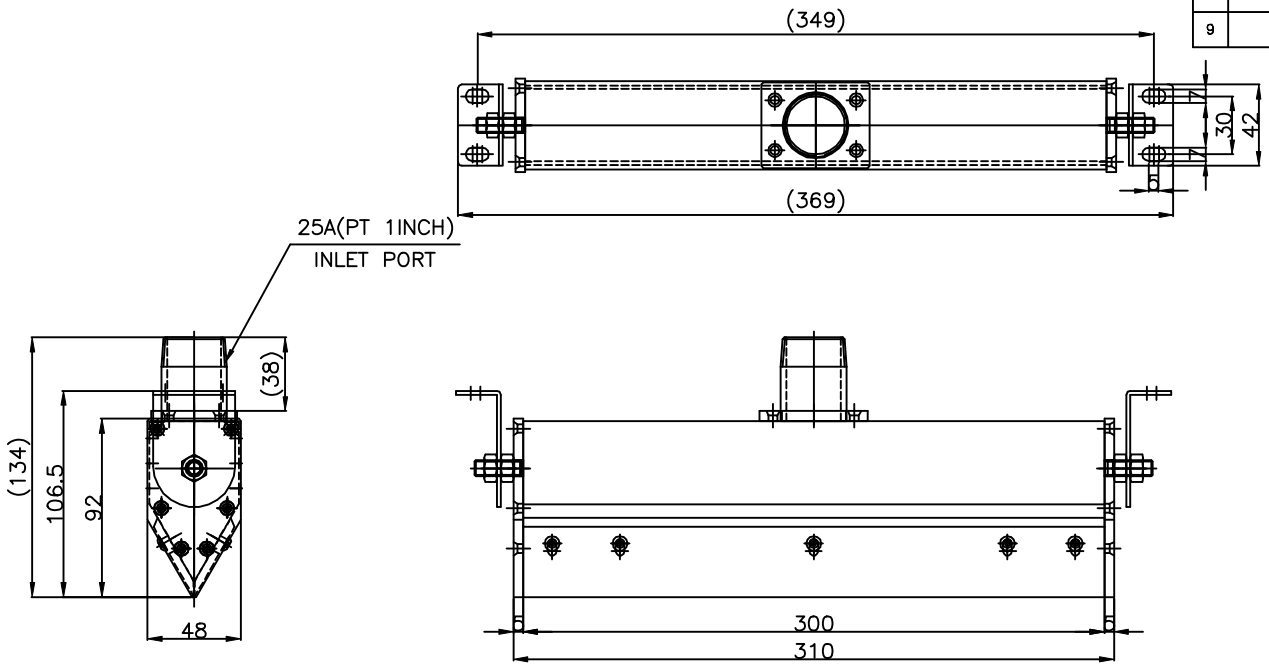

제작 유효길이: (MIN)100mm~(MAX)4800mm 까지 제작가능함.

NOTE

1. 날카로운 모서리 제거할것.
2. BOLT HOLE간 거리 허용공차 ±0.2 이내일것. ∼ ▽

COMMERCIAL TOLERANCE(mm)			
MACHINING		CANNING	
DIMENSION	TOL	DIMENSION	TOL
1~4	±0.1	less than 250	±1.0
4~16	±0.2	250~500	±2.0
16~63	±0.3	500~1000	±3.0
63~250	±0.5	1000~2000	±4.5
250~1000	±0.8	2000~4000	±6.0
1000~2000	±1.0	4000~6000	±8.0
2000~3000	±1.5		

COMPARISON OF SURFACE ROUGHNESS

RANGE OF SURFACE ROUGHNESS(μ): 100-S ▽, 25-S ▽▽, 6.3-S ▽▽▽

HEAT TREATMENT

PROJECTION

NO	DESCRIPTION	SPECIFICATION	Q'TY	MATER'L	WEIGHT	REMARKS

DATE	WEIGHT	SCALE	CUSTOMER
2021.04	Kg	1 / 1	

DRAWN BY	DESIGNED BY	CHECKED BY	APPROVED BY	TITLE
				ZB25-300L-1-U1 AIR KNIFE ASS'Y

Moobico.,Ltd.

DRAWING NO. MBA-25A-000

REV △

A2(594X420)

(SCALE 1:1)